REVISION HISTORY				
REV	DATE	DESCRIPTION	ECO	BY
X01	7/11/2007	PROTOTYPE RELEASE	N/A	FJM
A	08-01-07	INITIAL RELEASE OF PRODUCTION	11699	SJ

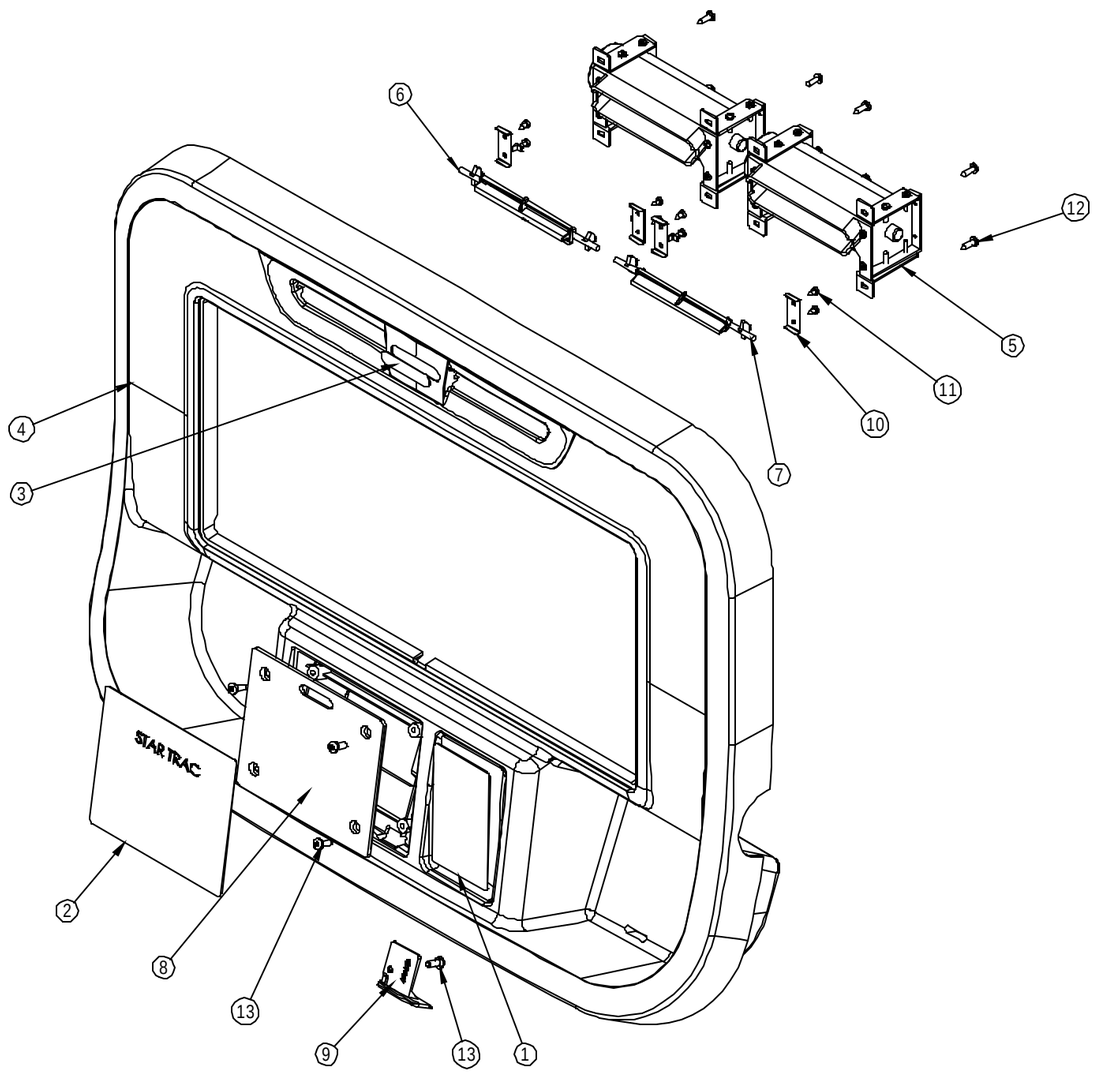

ITEM NO.	STAR TRAC P/N	INRAY P/N	DESCRIPTION	QTY.
1	050-2109	050-2109	LABEL, USER SAFETY, S-TR	1
2	050-2110	050-2110	LABEL, CENTER CONSOLE, S-TR	1
3	050-2111	050-2111	LOGO, FRONT DISPLAY, S-TR	1
4	740-6039	STDP3301	SHROUD, FRONT, S-TR	1
5	740-6040	740-6040	ASSY. BLOWER, S-TR	2
6	740-6042	STDP3303	VENT, LVELER, S-TR, LEFT	1
7	740-6043	STDP3304	VENT, LVELER, S-TR, RIGHT	1
8	740-6044	STDP3309	CAP, CENTER CONSOLE, S-TR	1
9	740-6045	STDP3307	COVER, HEADPHONE JACK, S-TR	1
10	740-6046	STDP3313	BRACKET, VENT HOLDER, S-TR	4
11	740-6500	GB845ST2.9*6.5¦ ¦	SCREW, GB845ST2.9*6.5	8
12	740-6501	GB845ST3.5*12¦ ¦	SCREW, GB845ST3.5*12	8
13	740-6502	GB6560M4*12¦ ¦ 2	SCREW, GB6560M4*12	5

NOTICE OF PROPRIETARY INFORMATION

THIS DOCUMENT SHALL NOT BE REPRODUCED NOR SHALL THE INFORMATION CONTAINED HEREIN BE USED BY OR DISCLOSED TO OTHER EXCEPT AS EXPRESSLY AUTHORIZED BY UNISEN INC, D.B.A. STAR TRAC.

DOCUMENT STATUS: RELEASE

NOTES:

UNLESS OTHERWISE SPECIFIED DIMS ARE IN mm.
TOLERANCES FOR MEASURE OF LENGTH ARE:

CLASS OF WORK		0.5 to 3	> 3 to 6	> 6 to 30	> 30 to 120	> 120 to 400	> 400 to 1000	> 1000 to 2000	> 2000
FINE		±0.05	±0.05	±0.1	±0.15	±0.2	±0.3	±0.5	-----
MEDIUM	X	±0.1	±0.1	±0.2	±0.3	±0.5	±0.8	±1.2	±2
COARSE		±0.2	±0.3	±0.5	±0.8	±1.2	±2	±3	±4
VERY COARSE		-----	±0.5	±1	±1.5	±2.5	±4	±6	±8

MATERIAL
SEE BOM

FINISH
N/A

VENDOR: P/N: **740-6041**

THIRD ANGLE PROJECTION

	INITIAL	DATE
DRAWN	FJM	07-11-07
CHECKED		
APPROVED		
	U.O.M.	MM

UNISEN, INC. DBA
STAR TRAC
14410 Myford Road
Irvine CA 92606

STARTRAC PART NO 740-6041 REV A

TITLE ASSY, FRONT CONSOLE, S-TR

SCALE: 1:1 | SHEET 1 OF 1 | SHEET SIZE: B